Department of Electronics and Communication Engineering
Amrita School of Engineering, Coimbatore - 641112

Batch ID :23ECE381C14

B.Tech – ECE
23ECE381 Open Laboratory – I

Exhibition Date:11/10/ 25

# SELF POWERED PIEZOELECTRIC ENERGY HARVESTER

Harish Venkat V.S - CB. EN.U4ECE23219
Rahul Mamidi - CB.EN.U4ECE23227
Marneedi Suprithi - CB.EN.U4ECE23228

## PROBLEM STATEMENT

A compact, self-powered, microcontroller-free synchronized switching interface circuit (SP-SSHI) using piezoelectric ceramics is developed to harvest irregular and low-frequency mechanical energy from human footsteps. Unlike conventional rectifier-based circuits, this SP-SSHI maximizes harvested energy, reduces losses from impedance mismatch, and stabilizes the output voltage while operating solely on the captured energy. The circuit eliminates the need for batteries, external power, or complex control electronics, enabling efficient, autonomous energy storage and delivery for long-lasting, cost-effective applications in sustainable wearable and sensor systems

## APPROACH / DESIGN/ METHODOLOGY

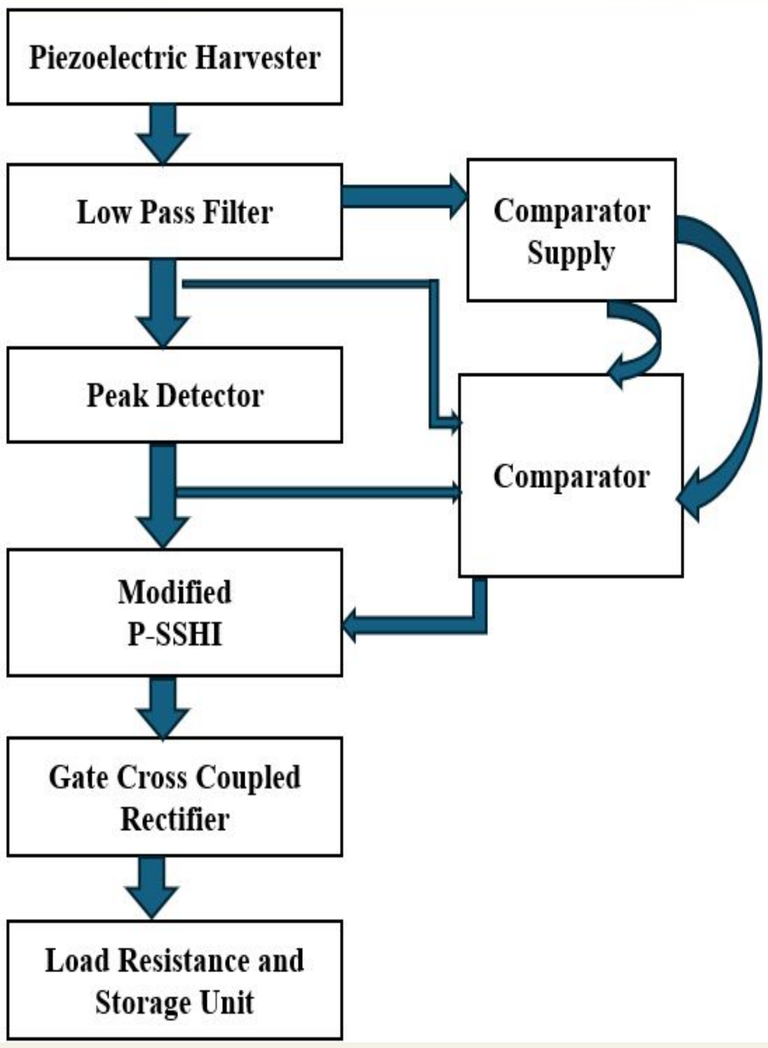


- **Energy Collection:** Piezoelectric ceramics embedded in insoles convert footstep pressure into AC voltage.
- **Signal Conditioning:** A low-pass filter removes noise, giving a clean low-frequency waveform.
- **Peak Detection:** Differentiator and comparator circuits detect voltage peaks and generate trigger pulses.
- **Synchronized Switching:** Trigger pulses control MOSFETs in a P-SSHI circuit to maximize energy extraction.
- **Rectification:** A Gate Cross-Coupled Rectifier (GCCR) efficiently converts AC to DC with minimal loss.
- **Energy Storage:** The DC output charges a supercapacitor or coin cell for powering low-power devices.
- **Self-Powered Operation:** The circuit works without a microcontroller or external power source.

## CIRCUIT DIAGRAM /ALGORITHM

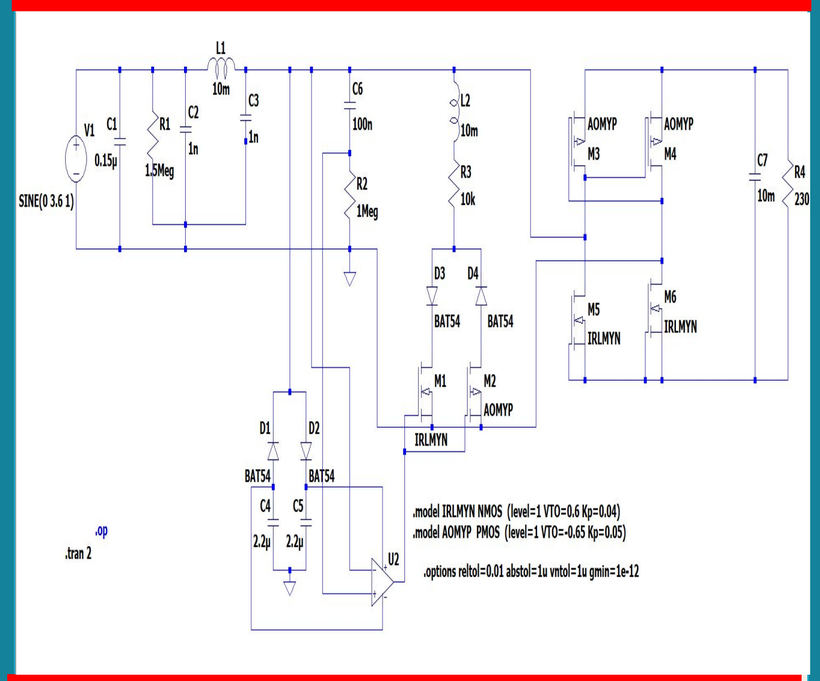


## SIMULATION RESULTS

INPUT WAVEFORM

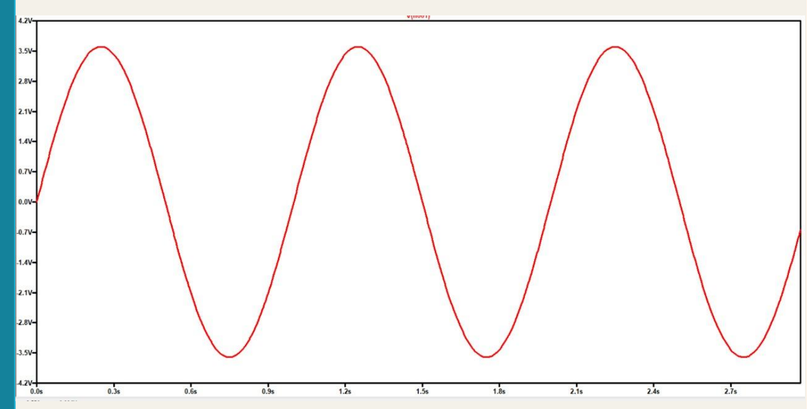

COMPARATOR , PEAK DETECTOR & P-SSHI SWITCHING

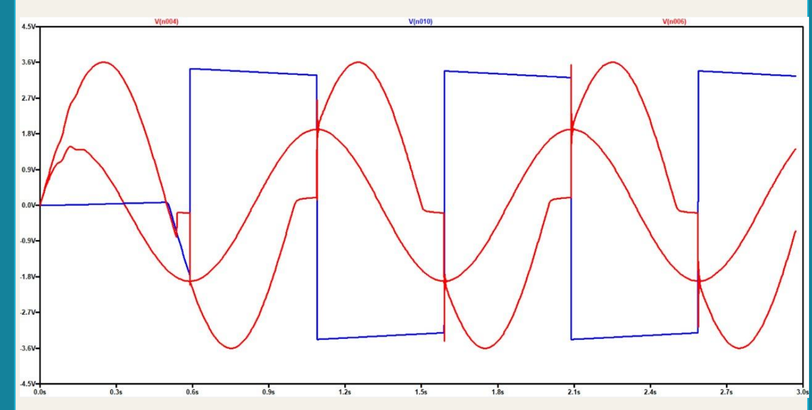

OUTPUT VOLTAGE AND CURRENT

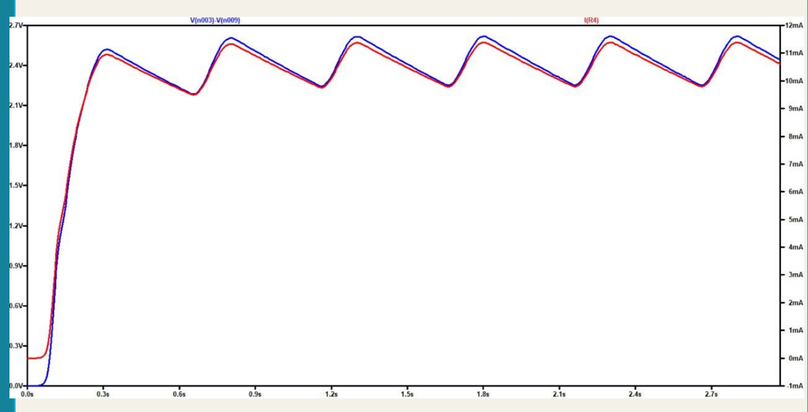

OUTPUT POWER

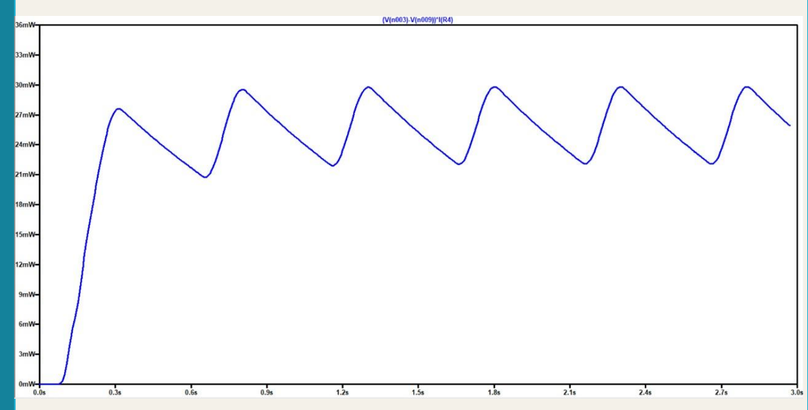

## RESULTS

- At the piezo element (Cp), we get an AC sine wave of about 7.2 V peak-to-peak at low frequency (1Hz).
- After the π-filter with the high-value resistor, the waveform remains nearly the same in amplitude (~3.6V), but high-frequency noise is filtered out, leaving only the clean low-frequency signal.
- At the output (Rtrig–Ctrig), the sine wave is converted into sharp voltage pulses (2.7-3 V) that occur exactly at the peaks of the input waveform.
- The comparator processes these pulses and produces a digital output that switches cleanly between 0 V and ±3.3V, synchronized with the piezo signal peaks.
- During P-SSHI switching, the comparator output controls the MOSFETs so the piezo voltage is inverted at each peak, which increases the harvested energy.
- At the GCCR rectifier output, the inverted AC signal is converted to DC, around 0.5 V, with reduced losses compared to conventional diodes.
- Finally, at the storage capacitor (Cstr), we get a stable DC voltage of 2.4-2.5V amd current around 11mA and output power received at the output is 30mW.

## REFERENCES

[1] M. Ben Ammar, S. Sahnoun, A. Fakhfakh, C. Viehweger, and O. Kanoun, "Self-powered synchronized switching interface circuit for piezoelectric footstep energy harvesting," *Sensors*, vol. 23, no. 4, Art. no. 1830, Feb. 2023. [Online]. Available: https://doi.org/10.3390/s23041830

[2] H. S. Kim, J.-H. Kim, and J. Kim,"A review of piezoelectric energy harvesting based on vibration," *International Journal of Precision Engineering and Manufacturing*, vol. 12, no. 6, pp. 1129–1141, Dec. 2011. [Online]. Available: https://doi.org/10.1007/s12541-011-0151-3

[3] F. Qian, T.-B. Xu, and L. Zuo, "Piezoelectric energy harvesting from human walking using a two-stage amplification mechanism," *Energy*, vol. 189, Art. no. 116140, Sep. 2019. [Online]. Available: https://doi.org/10.1016/j.energy.2019.116140

[4] S. Chamanian, B. Çiftçi, A. Muhtaroğlu, and H. Külah, "A self-powered and area efficient SSHI rectifier for piezoelectric harvesters," *IEEE Access*, vol. 9, pp. 117703–117715, Aug. 2021. [Online]. Available: https://doi.org/10.1109/ACCESS.2021.3107365

[5] K. A. Chandra, S. Narayan, K. A. Mamun, A. A. Chand, D. Prasad, and M. R. Ahmed, "A review of footstep energy harvesting systems," *IEEE Access*, vol. 13, pp. 87149–87166, May 2025. [Online]. Available: https://doi.org/10.1109/ACCESS.2025.3570963